Speed Queen
The Proven Performer in Laundry

On-Premises Softmount Washer-Extractors

SY350, SY450, SY600

FEATURES

- Freestanding, high spin
- Patented Cascade Drum™
- Stainless steel drum and tub
- 2x large drain valves (Ø 76 mm)
- Easy Soap™ - liquid soaps connection
- Large door opening for easy loading unloading
- Ergonomic height of door enables easy access with trolleys
- RS485 plug (on the back panel)
- User Friendly control position regardless the user's height
- Bumper (front side protection)
- Soap hopper

Quantum Touch Control

- 7" Touch intuitive programmer
- Available in 34 languages
- Factory built wifi for programming and updating
- Service alerts for easy maintenance
- Fully programmable
- 20 preset programs, up to 99 in memory
- Insights laundry management software for a perfect control of your laundry installation.

OPTIONS

- Liquid soap pumps
- Recycle drain valve
- Insulation for energy and heat & noise reduction
- Extra signalization (orange light + sound)
- Steam/electric heating version
- Air operated water inlets
- Water tap
- 3rd water inlet, high inlets capacity
- Automatic weighing system through 4 weighing cells
- Tilting system: assists operators during loading & unloading

Approach, program and running cycle screen

Easy Operation

Ergonomical Construction

Robust Design

Large Door Opening

On-Premises Softmount Washer-Extractors

Specifications

	SY350	SY450	SY600
INNER DRUM CAPACITY			
Volume [l]	351	452	601
Capacity 1:09 [kg(lb)]	39 (86)	50 (110)	67 (148)
Capacity 1:10 [kg(lb)]	35 (77)	45 (99)	60 (132)
Depth [mm]	535	690	715
Diameter [mm]	914	914	1035
MOTOR			
Power [kW]	4	7.5	7.5
DRUM SPEED			
Wash speed (default) [rpm]	38	38	36
Extraction speed (default) [rpm]	839	839	788
G-factor	360	360	360
PROGRAMMER			
Type of control	Quantum Touch	Quantum Touch	Quantum Touch
CABINET			
Stainless steel	Yes	Yes	Yes
Door Opening [mm]	540	540	540
Door Opening angle [mm]	178	178	178
HEATING			
100% Hot Water [°C]	90	90	90
100% Electrical [kW]	24	36	54
Steam High Pressure [bar]	3 – 8	3 – 8	3 – 8
CONNECTION			
Water Inlet [in]	3 × 1″	3 × 1″	3 × 1″
Steam Inlet [in]	1 × ¾″	1 × ¾″	1 × ¾″
Drain Diameter [in]	2 × 3″	2 × 3″	2 × 3″
Drain valve outer [mm]	2 × 76	2 × 76	2 × 76
Flow amount with drain valve [l/min]	2 × 210	2 × 210	2 × 210
POWER			
Electrical requirements [V/Hz]	3×200–240V/50–60Hz 3×380–415V/50–60Hz 3×440–480V/50–60Hz		
Heating element [kW]	24	36	54
TILTING			
Forward tilting	n/a	Option	Option
TRANSPORT DATA			
Net Weight [kg]	1010	1350	1500
Net Weight (w/tilting) [kg]	n/a	1390	1540
Shipping Weight [kg]	1170	1490	1640
Shipping Weight (w/tilting) [kg]	n/a	1530	1680
Crate packing volume [m^3]	4.45	5.15	5.15
Crate packing volume (w/ tilting) [m^3]	n/a	5.26	5.26
DIMENSIONS			
Dimensions H×W×D [mm]	1925×1315×1270	1925×1315×1502	1925×1315×1502
Packaging dimension H×W×D [mm]	2125×1425×1470	2125×1425×1700	2125×1425×1700

On-Premises Softmount Washer-Extractors

Dimensions

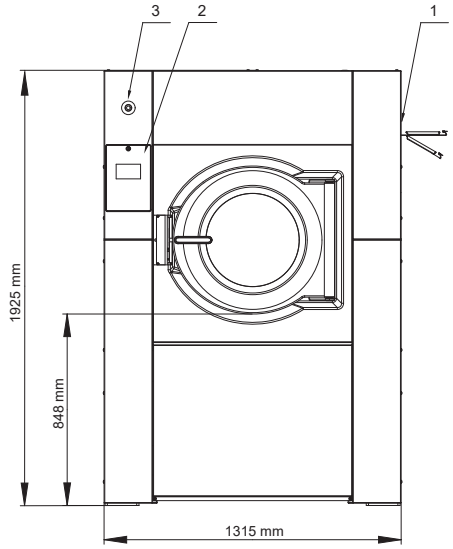

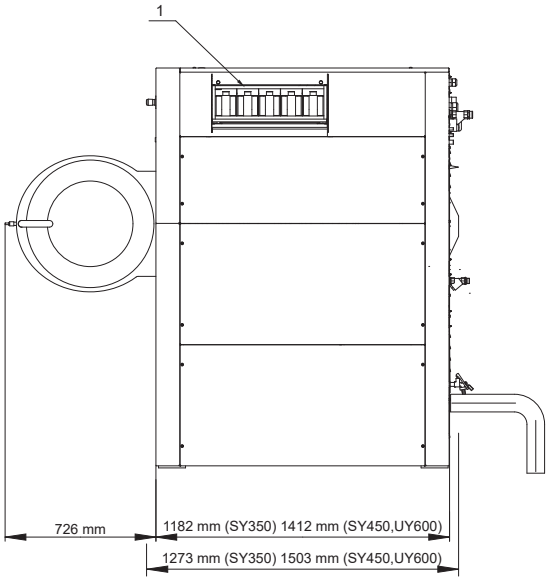

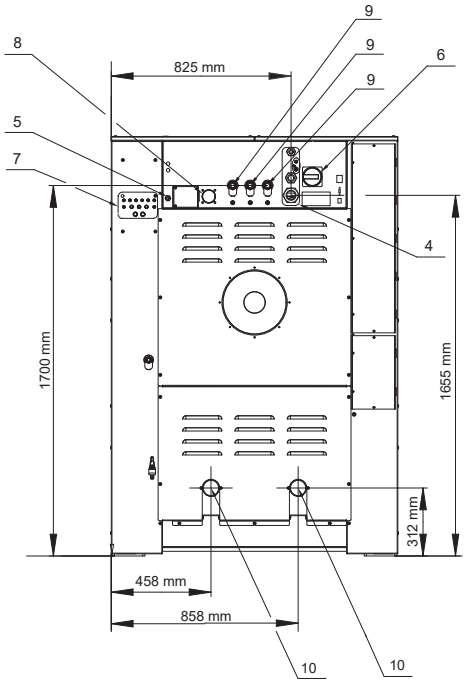

1. Soap hopper
2. Keyboard
3. Emergency stop
4. Electrical connection
5. Electrical connection t liquid soap
6. Main switch
7. Liquid soap pump connections
8. Air vent tub
9. Water connection
10. Drain valve
11. Water sample tap

Speed Queen Laundry Systems
21 Hannigan Drive, Auckland 1072
Ph: +64 9 528 5600
Ph: 0800 77 333 7
W: www.speedqueen.co.nz
E: Sales@speedqueen.co.nz