Speed Queen
The Proven Performer in Laundry

On-Premises Softmount Washer-Extractors

SY800 , SY1000 , SY1200

FEATURES

- Freestanding, high spin washer
- Stainless steel cabinet
- Stainless steel drum and tub
- Extra large door opening (SY800, SY1000 Ø 530 mm, SY1200 Ø 650 mm)
- Two large drain valves (Ø 103 mm)
- Easy access to all parts
- USB plug located on the main board
- Standard liquid soap connections
- Frequency controlled motor
- PowerWash® perforated lifting ribs: more mechanical action, lower water consumption
- Air operated water inlet
- SuperEco washing programmes significantly reduces water and electricity consumption
- Patented soap dispenser with 5 removable compartments
- Manual weighting system

Quantum Touch Control

- 7" Touch intuitive programmer
- Available in 34 languages
- Factory built wifi for programming and updating
- Service alerts for easy maintenance
- Fully programmable
- 20 preset programs, up to 99 in memory
- Insights laundry management software for a perfect control of your laundry installation.

OPTIONS

- Liquid soap pumps
- Recycle drain valve
- Insulation for energy and heat & noise reduction
- Automatic weighing system through 4 weighing cells
- Tilting system: assists operators during loading & unloading

Approach, program and running cycle screen

Easy Operation

Ergonomical Construction

Robust Design

Large Door Opening

On-Premises Softmount Washer-Extractors

Specifications

	SY800	SY1000	SY1200
INNERDRUM			
Capacity 1:09 [kg(lb)]	89 (196)	108 (238)	128 (282)
Capacity 1:10 [kg(lb)]	80 (176)	100 (214)	120 (253)
Volume [l]	807	1003	1180
Diameter [mm]	1110	1200	1300
MOTOR			
Frequency controlled	yes	yes	yes
DRUM SPEED			
Wash speed rpm [rpm]	36	33	32
Spin speed rpm [rpm]	750	720	695
G-Factor spin speed	350	350	350
PROGRAMMER			
Type of Control	Quantum Touch	Quantum Touch	Quantum Touchs
CABINET			
Stainless steel AISI 304	Standard	Standard	Standard
DRUM			
Stainless steel AISI 304	Standard	Standard	Standard
HEATING			
Electrical (standard) [kW]	67.5/70	–	–
Steam high pressure [bar] [psi]	3 – 8 44 – 116	3 – 8 44 – 116	3 – 8 44 – 116
CONNECTION			
Electrical [kW]	3×380–480V/50–60Hz 3×208–240V/50–60Hz 11.25	3×380–480V/50–60Hz 3×208–240V/50–60Hz 15.25	3×380–480V/50–60Hz 3×208–240V/50–60Hz 18.75
Water inlet [inch]	3 × 1 ½″	3 × 1 ½″	3 × 1 ½″
Steam inlet [inch]	1″	1″	1″
Compressed air inlet [mm]	Ø8	Ø8	Ø8
Drain [mm]	2 × 103	2 × 103	2 × 103
DIMENSIONS			
Size HxWxD [mm]	1985×1495×1940	2060×1790×2005	2085×1855×2085
TRANSPORT DATA			
Gross weight [kg]	2830	3410	3710
Net weight [kg]	2640	3170	3480
Volume (packed) [m^3]	7.25	9.29	10.16
Crate packing HxWxD [mm]	2200×1690×1950	2345×1865×2125	2340×2000×2170

– = Not available

Standard = Standard execution, The data concerning dimensions of machines include all extended parts

Speed Queen LAUNDRY SYSTEMS

Speed Queen Laundry Systems
21 Hannigan Drive, Auckland 1072
Ph: +64 9 528 5600
Ph: 0800 77 333 7
W: www.speedqueen.co.nz
E: Sales@speedqueen.co.nz

On-Premises Softmount Washer-Extractors

Dimensions

	A	B	C	D	E(1)	F(1)	G	H	I	J	K	L	M	N	O(1)	P(1)	Q(1)	R	S(1)
SY800	1495	1985	1940	1390	1105	842	303	168	125	125	90	100	83	210	1872	1759	1955	1460	254
SY1000	1790	2060	2005	1688	1175	857	232	232	125	125	124	110	83	210	1405	1950	1754	268	419
SY1200	1855	2085	2085	1754	1200	842	295	247	125	125	120	148	83	210	1548	1435	1980	1820	243

	T(1)	U(1)	V(1)	W	X	Y	Z
SY800	409	634	707	197	380	665	1759
SY1000	419	696	768	197	527	650	1836
SY1200	394	722	795	197	562	757	1866

All measurements are in mm.

(1) The dimensions of the machine with weighing system (on request) are higher.
The height difference is in the range of 74-79 mm, based on the adjustment of the load sensor.

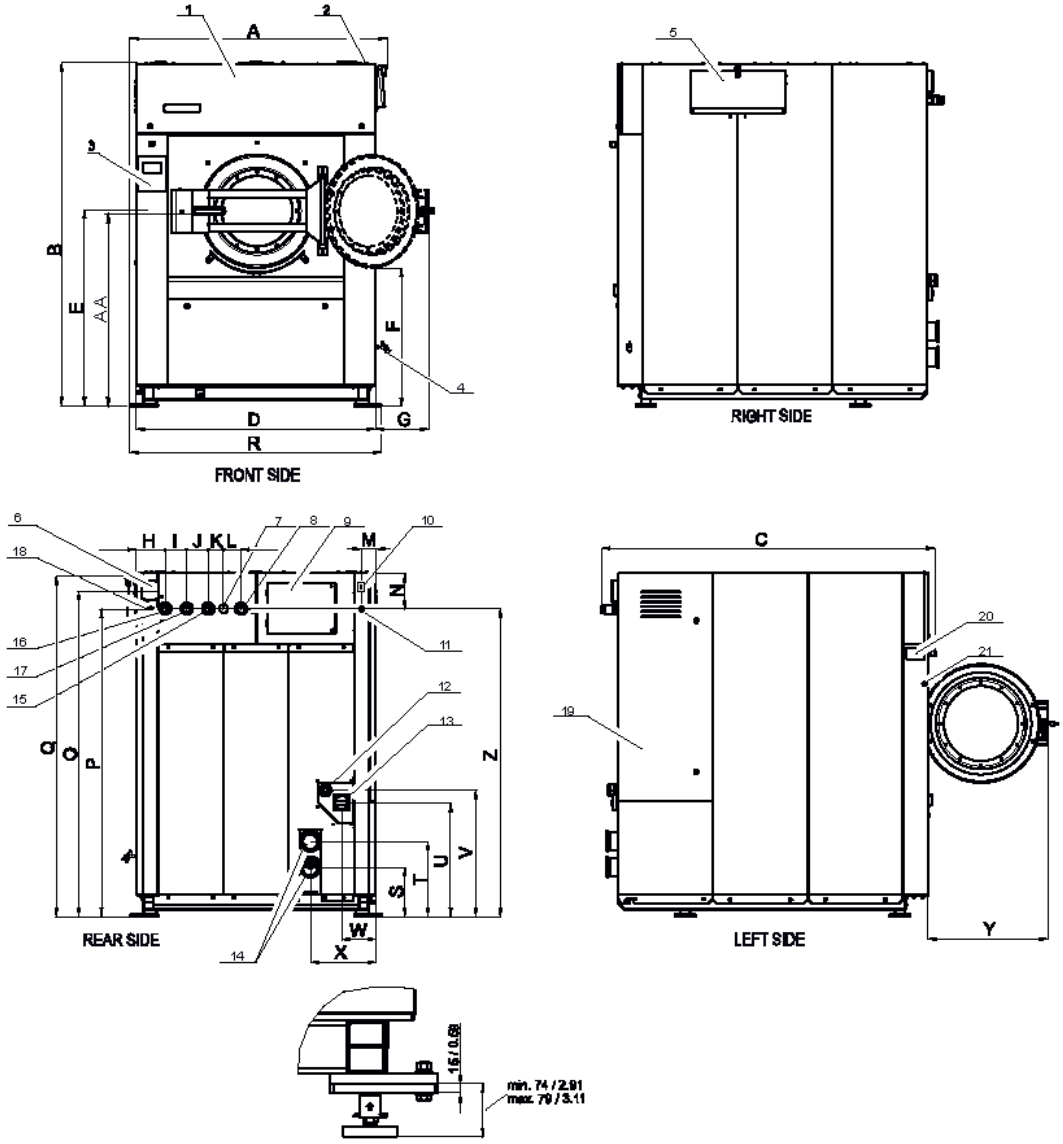

1. Box of electrical components
2. Soap dispenser ventilation
3. Control panel
4. Soap dispenser
5. Electrical signals liquid soap
6. Steam inlet
7. Tub ventilation
8. Cover for pneumatic components
9. Hose connection soap supply
10. Hard cold water inlet
11. Soft cold water inlet
12. Hot water inlet
13. Compressed air inlet
14. Entry main power cable
15. Main switch
16. Drain outlet
17. Electric switchboard cover
18. Serial plate
19. USB port
20. PC programming connection RS485 (on request)