Speed Queen
The Proven Performer in Laundry

SPEED QUEEN® QUANTUM® TOUCH

Washer-Extractors

SCA020	SCA030	SCA040	SCA060
20 lb (9 kg)	30 lb (14 kg)	40 lb (18 kg)	60 lb (27 kg)

Quantum® Touch Control

Reimagine your laundry experience with the Speed Queen Quantum Touch display. Clear, easy to use, easy to understand directions with profitable cycle modifiers enhance your customers' experience and increase return on investment.

- 7", full color, touch screen display
- User-friendly screen with operating instructions built in as part of the control - Help and Hints ICON on all screens.
- 11 basic cycles, 1 custom cycle, 3 temperature selections
- Allowing users to be in charge of the wash result though full cycle selection options and modifiers.

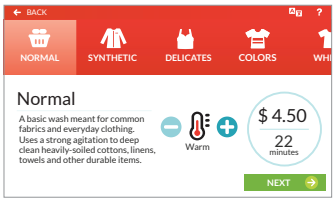

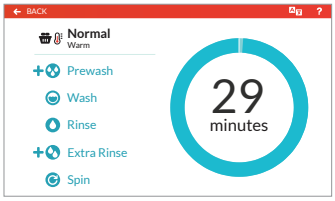

- Easy-to-understand cycle modifier prompts will encourage your customers to customize their wash
- Flexible pricing & additional revenue opportunities with customizable cycle modifiers, time-of-day pricing and lucky cycle options
- 30+ languages available
- On screen timer so your customers know exactly how much time their cycle will take
- Speed Cycle option for those who want to get in and out quickly
- Flexible Payment Options - Coin, Card, Mobile, Cash
- Cash less Payment via individual Card Reader.
  or Insights PRO - with SQ PAY Smart Phone APP

SPEED QUEEN® QUANTUM® TOUCH

Hardmount Washer-Extractors

A heavy-duty design meets superior machine mechanics to form the industry's most trusted hardmount washer-extractor.

- Strong frame lasts longer, balances loads more efficiently, and is designed to reduce sound and vibration levels
- Advanced Inverter Drive system provides smooth, reliable performance
- Higher extraction speeds mean shorter dry times and lower energy bills
- Sump system design maximizes cleaning power while using 7% less water
- Leak detection with our patented Water Guardian, saves water by detecting slow or leaking fill-valves and drains
- Easily serviceable with front panel access

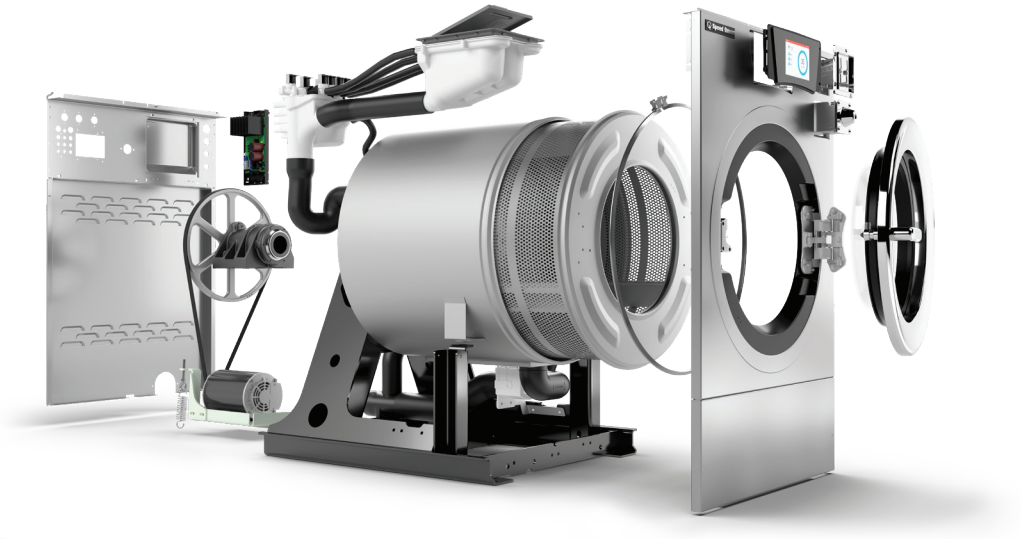

SPEED QUEEN® INSIGHTS READY

A profitable Vended Laundry business relies on a combination of factors to grow and stay strong in a competitive market.

Primary factors of - Location - Size of store - Demographics - store layout - functionality and Equipment selection are the foundation of a strong business. But when you want to stand out from the market you need Speed Queen Touch

When you fully set up with the Speed Queen Insights PRO module, you will find a new level of flexibility in with the rest of your business management tools.

You can trust Speed Queens Global Heritage of design and strength, this is now enhanced by the largest cloud based network of Laundromat equipment spread across the Globe. Our USA based 24hr support team has the depth of know how to work with you locally to maximise returns.

You will have the flexibility and control over key aspects of your modern business

- Full visibility of all Washers and Dryers across your stores
- Remote commands - Start - Stop - Clear Vend etc
- Summary view of equipment use and income
- Set up management Alerts and Reports on key metrics
- Market your Cashless APP program directly to users
  CRM data collection - Rewards Programs - Bonus Offers
- Adjust programmed cycle via the cloud and much more.

Your confidence will continue to grow with the consistent evolution of this Global Network, all updated automatically.

SPEED QUEEN® INSIGHTS READY

Take your business to new levels of efficiency and profitability with advanced analytics and customer data—all integrated into the same platform with the rest of your business management tools. Know how often each customer visits, which machines they use, how they pay, and use that information to increase your revenue through stronger customer relationships and a more rewarding laundry experience.

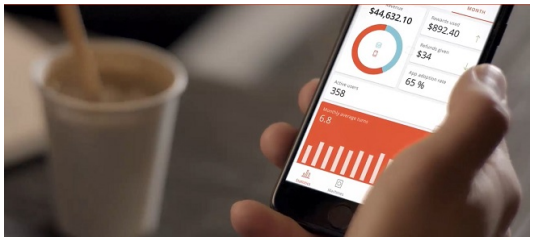

Hardmount Washer-Extractors

		SCA020	SCA030	SCA040	SCA060
Control Option		Quantum Touch	Quantum Touch	Quantum Touch	Quantum Touch
Capacity - kg		9	14	18	27
Overall Width - (mm)		(660)	(737)	(777)	866
*Overall Depth - (mm)		(785)	(897)	(1074)	1135
Overall Height - (mm)		(1092)	(1143)	(1199)	1267
Cylinder Diameter - (mm)		(533)	(610)	(668)	762
Cylinder Depth - (mm)		(351)	(406)	(516)	559
Cylinder Volume - (liters)		(79)	(119)	(178)	255
Door Opening Size - (mm)		(295)	(363)	(414)	414
Door Bottom to Floor - (mm)		(366)	(356)	(371)	378
Water Inlet Connection - (mm)		2 x (19)	2 x (19)	2 x (19)	2 x 19
Drain Diameter - (mm)		1 x (76)	1 x (76)	1 x (76)	1 x 6
Drain Height to Floor - (mm)		(99)	(109)	(114)	124
Motor Power Consumption - HP (kW)		1 (0.75)	1 (0.75)	2 (1.5)	2.2
Total # of Speeds		9	9	9	9
Cylinder Speeds - RPM (G-Force)	Gentle	37 (0.4)	34 (0.4)	33 (0.4)	31 (0.4)
	Wash	51 (0.8)	48 (0.8)	46 (0.8)	43 (0.8)
	Distribution	92 (2.5)	86 (2.5)	82 (2.5)	77 (2.5)
	Very Low	301 (27)	282 (27)	269 (27)	252 (27)
	Low	518 (80)	485 (80)	464 (80)	434 (80)
	Medium	579 (100)	542 (100)	518 (100)	485 (100)
	High	648 (125)	606 (125)	579 (125)	542 (125)
	Very High	710 (150)	664 (150)	635 (150)	594 (150)
	Ultra High	819 (200)	766 (200)	733 (200)	686 (200)
Voltage/Circuit Breaker - FLA ***	200-240/50/1/3	15-4 (1 Ph)	15-7 (1 Ph)	15-7 (1 Ph)	15-11 (1 Ph)
	220-240/50/1/3 (Pump Drain Only)	15-4 (1 Ph)	15-7 (1 Ph)	15-7 (1 Ph)	15-7 (3 Ph)
Shipping Dimensions Approx.- (mm)	Width	(711)	(800)	(826)	(953)
	Depth	(859)	(973)	(1105)	(1191)
	Height	(1255)	(1303)	(1361)	(1430)
Packed (with crate) Dimensions Approx.- (mm)	Width	(826)	(915)	(940)	(1069)
	Depth	(935)	(1050)	(1166)	(1268)
	Height	(1397)	(1397)	(1413)	(1626)
Net Weight - (kg)		(154)	(200)	(245)	(308)
Shipping Weight - (kg)		(172)	(218)	(263)	(327)
Slat Crate Shipping Weight - (kg)		209	263	308	381

*Overall depth includes vacuum breaker to door handle.

**Circuit breaker and amp draw data shown are for models without electric heat. Consult factory for other configurations. Manufacturer strongly recommends using a circuit breaker instead of fuses. Use 3-pole circuit breakers for 3-phase machines.

*** Agency approvals may vary depending on configuration. Consult factory for details. Steam connection requires 1/2" N.P.P.

For the most accurate information, the installation guide should be used for all design and construction purposes.
Due to continuous product improvements, design and specifications subject to change without notice. The quality management systems at Alliance Laundry Systems are registered to ISO 9001.

Hardmount Washer-Extractors

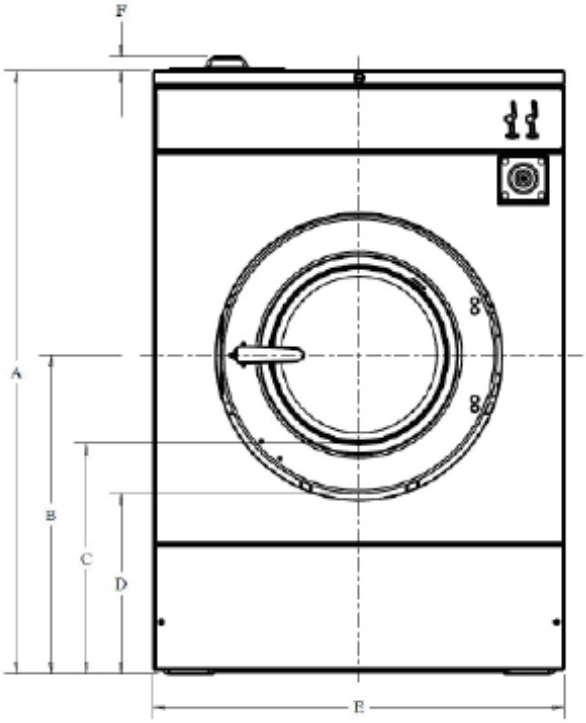

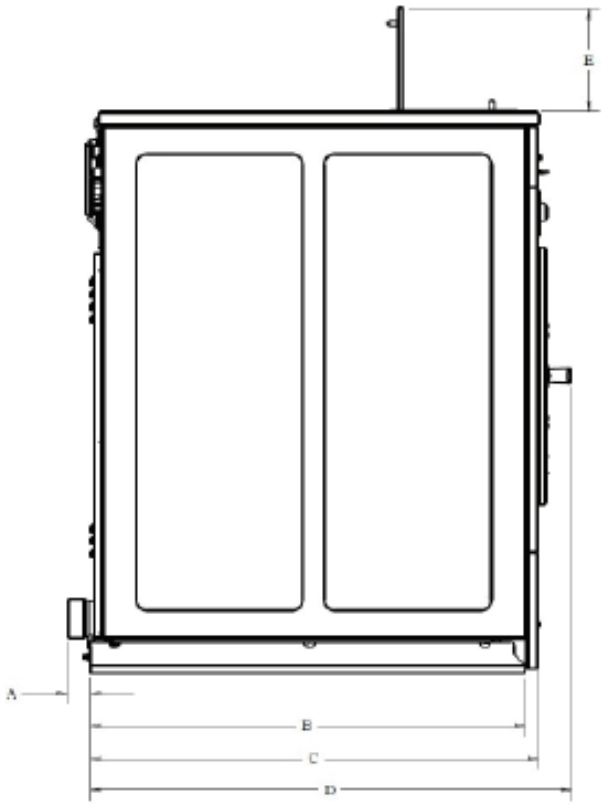

Dimensions - (mm)		SC020	SC030	SC040	SC060
Front	A	1093	1143	199	1268
	B	585	610	661	671
	C	432	432	450	460
	D	366	356	371	379
	E	661	737	778	867
	F	28	28	28	28
Side	A	50.8	50.8	50.8	50.8
	B	681	800	902	981
	C	694	800	940	1004
	D	785	897	1075	1136
	E	237	237	237	237

Speed Queen LAUNDRY SYSTEMS

Speed Queen Laundry Systems
21 Hannigan Drive, Auckland 1072
Ph: +64 9 528 5600
Ph: 0800 77 333 7
W: www.speedqueen.co.nz
E: Sales@speedqueen.co.nz