SDGNXA Commercial Dryer

10 KG TOUCH CONTROL, ELECTRONIC COIN DROP GAS DRYER

Features and Benefits

- Super strength, high security, double wrapped steel front money vault discourages and prevents vandalism.
- 100% front service dryer reduces maintenance time and costs ensuring maximum availability.
- Front controls matching the SFNNXA front load coin operated washer for perfect paring of both capacity and style.
- 27Mj gas fueled burner for reduced energy costs and faster, efficient drying.
- Electronic coin mechanism will accept 20c, $1, $2 or a token while rejecting foreign currency, with the vend price adjustable in seconds with no hardware changes required.

SPECIFICATIONS

DIMENSIONS	
CAPACITY	10 kg
WIDTH	683 mm
DEPTH	711 mm
HEIGHT	1,092 mm
DRUM VOLUME	198 litres
NET WEIGHT	68 kg
OPERATION	
CYCLES	5 cycles, 4 fabric temperatures
CYCLE INDICATOR	Yes, digital display
CYCLE TIME	Variable to suit desired vend price
CONTROLS	Electronic
ACTIVATION	Card, Token, Electronic coin drop
HEAT INPUT	27Mj Natural Gas or LPG
MOTOR	1/3 hp, 0.25kw
POWER SUPPLY	10amp, single phase
CONSTRUCTION	
DRUM	Galvanised
OUTER CABINET	Steel

SDGNXA Commercial Dryer

TECHNICAL SPECIFICATIONS

UTILITIES
SINGLE PHASE 240 V 50 HZ 10 AMP
10 AMP CIRCUIT-BREAKER REQUIRED
1.8 M POWER CORD
27MJ NATURAL GAS OR LPG
FLUE DIAMETER 102 MM (4 INCH)
AIR FLOW 85 LITRES / SECOND
OPTIONAL RIGHT HAND SIDE VENTING

SHIPPING DIMENSIONS	
WEIGHT	66 kg
HEIGHT	1,143 mm
WIDTH	775 mm
DEPTH	762 mm
	0.67 m^3

A *1126 mm [44.34 in.]
B *938 mm [36.94 in.]
C *392 mm [15.44 in.]
D *102 mm [4 in.]
E *70 mm [2.8 in.]
F 60 mm [2.3 in.]
G 391 mm [15.4 in.]
H 683 mm [26.875 in.]
I *114 mm [4.5 in.]
J 10 mm [0.4 in.]
K 203 mm [8 in.]
L 711 mm [28 in.]
M 597 mm [23.5 in.]
* With leveling legs turned into base.

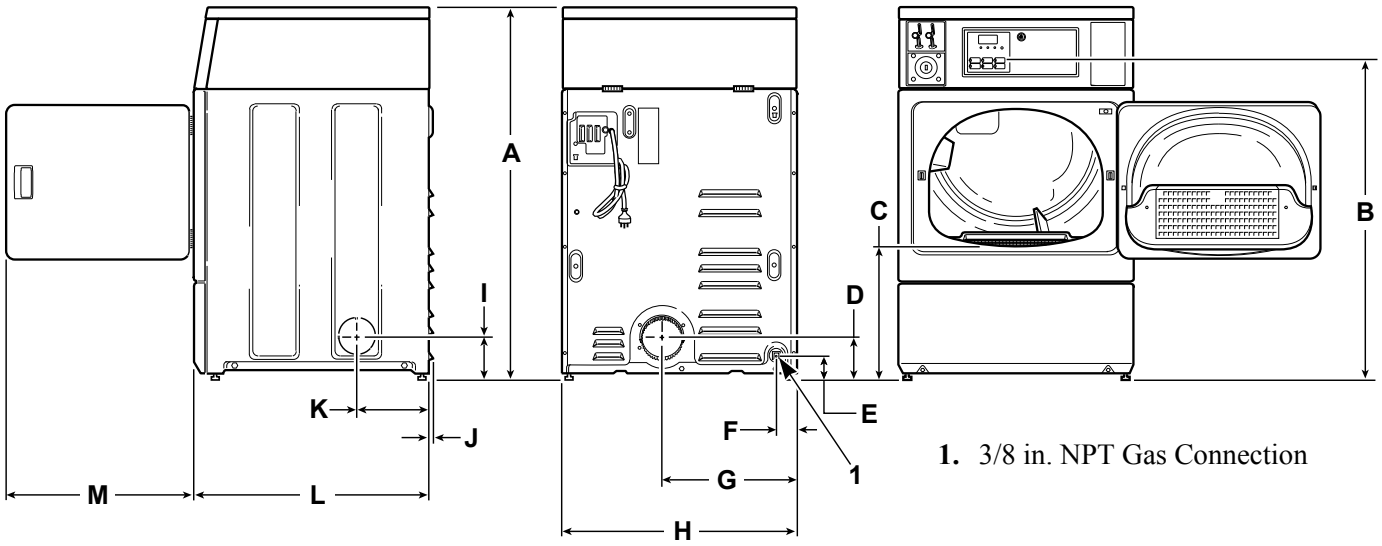

1. 3/8 in. NPT Gas Connection

Speed Queen Laundry Systems
21 Hannigan Drive, Auckland 1072
Ph: +64 9 528 5600
Ph: 0800 77 333 7
W: www.speedqueen.co.nz
E: Sales@speedqueen.co.nz