# STGNXA Commercial Washer/Dryer

# 10 KG FRONT LOAD WASHER AND STACKED GAS DRYER

## Features and Benefits

- Low water consumption of only 44.3 litres per wash, with full wash completed in 30 minutes.
- Energy saving 'High Speed Extract' spin cycle of 1,200 rpm producing 'G' forces in excess of 440 for greater water removal, resulting in reduced drying times and associated energy savings.
- 100% front service gas dryer for fast, efficient drying.
- Electronic coin mechanism will accept $1, $2 or a token while rejecting foreign currency, with the vend price adjustable in seconds with no hardware changes required.

## SPECIFICATIONS

| DIMENSIONS | |
|---|---|
| CAPACITY | 10 kg washer, 10 kg dryer |
| WIDTH | 683 mm |
| DEPTH | 704 mm |
| HEIGHT | 1,986 mm |
| NET WEIGHT | 177 kg |
| **OPERATION** | |
| CYCLES | 9 cycles, 3 soil levels |
| CYCLE LIGHTS | Yes |
| CYCLE TIME | 26 - 30 min |
| CONTROLS | Touch push button controls |
| ACTIVATION | Card, Token, Electronic coin drop |
| WATER TEMPERATURE | Cold, Warm, Hot |
| MOTOR WASHER | 1 hp, variable speed |
| SPIN SPEED WASHER | 500 - 1,200 rpm, variable speed |
| WATER USE WASHER | 44.3 litres / wash |
| HEAT INPUT DRYER | 27 mj natural gas or LPG |
| **HEAT INPUT (DRYER)** | |
| INNER BOWL WASHER | Stainless steel |
| OUTER BOWL WASHER | Stainless steel |
| OUTER CASING | Steel |
| DRUM DRYER | Galvanized steel |

# STGNXA Commercial Washer/Dryer

## TECHNICAL SPECIFICATIONS

| UTILITIES WASHER |
|---|
| 10 AMP SINGLE PHASE 240 V 50 HZ |
| 10 AMP CIRCUT BREAKER |
| 1.8M POWER LEAD |
| HOT AND COLD WATER SUPPLY |
| 1.2 M HOT AND COLD WATER HOSES SUPPLIED |
| WATER SUPPLY HOSE TAP ENDS ¾ BSP THREADS |
| MAX HOT WATER CONSUMPTION 18.9 LITRE / CYCLE |
| MAX WATER CONSUMPTION 44.3 LITRE / CYCLE |
| MAX POWER DRAW 670 W / HR |
| WATER SUPPLY PRESSURE BETWEEN 20 - 120 PSI |
| DRAIN: 610 - 914 MM UPSTAND, 50 MM DIAMETER |

| UTILITIES DRYER | |
|---|---|
| 10 AMP SINGLE PHASE | 240 V 50 Hz |
| 10 AMP | Breaker required |
| 1.8 M FLEX | Power Cord |
| FLUE DIAMETER | 102 mm (4 in) |
| AIR FLOW | 85 litres / second |
| MAX POWER DRAW | 4,000 w / hour |
| OPTIONAL | Right or left side venting |

| SHIPPING DIMENSIONS | |
|---|---|
| WEIGHT | 189 kg |
| HEIGHT | 2,032 mm |
| WIDTH | 762 mm |
| DEPTH | 864 mm |
| | 1.33 $m^3$ |

A *1678 mm [66.06 in.]
D 213 mm [8.375 in.]
G 391 mm [15.4 in.]
J *371 mm [14.6 in.]
M 683 mm [26.875 in.]
P 52 mm [2.04 in.]
S *333 mm [13.1 in.]

B *1447 mm [56.97 in.]
E 610 mm [24 in.]
H 59 mm [2.3 in.]
K *1140 mm [44.87 in.]
N *1986 mm [78.17 in.]
Q 704 mm [27.73 in.]

C 597 mm [23.5 in.]
F 203 mm [8 in.]
I *938 mm [36.9 in.]
L *813 mm [32 in.]
O *1184 mm [46.62 in.]
R (with door closed) 38 mm [1.5 in.]

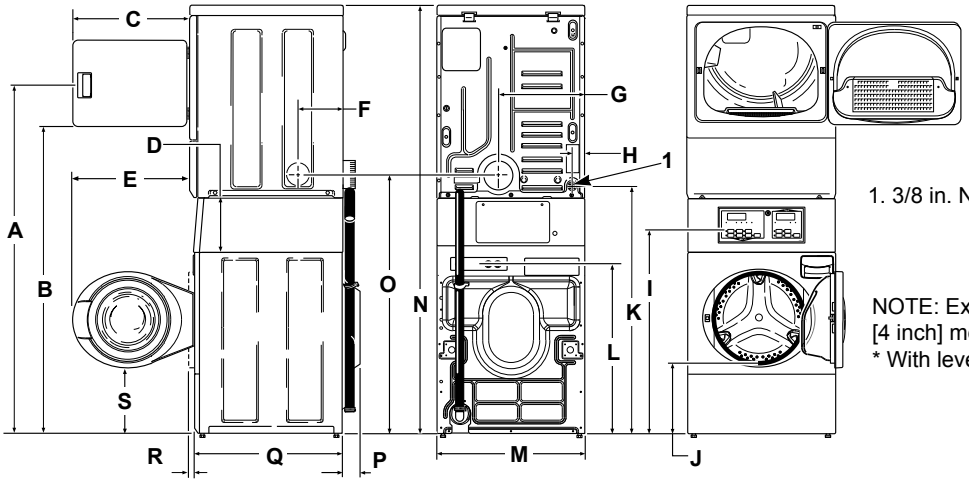


1. 3/8 in. NPT Gas Connection

NOTE: Exhaust openings are 102 mm [4 inch] metal ducting.
* With leveling legs turned into base.


Speed Queen Laundry Systems
21 Hannigan Drive, Auckland 1072
Ph: +64 9 528 5600
Ph: 0800 77 333 7
W: www.speedqueen.co.nz
E: Sales@speedqueen.co.nz